CNC Procedure 2016_036	Dec 14th 2016
Preparation for bypassing external Position Coder in case of Sensorless Spindle motors	[**Procedure applicable for β-ilc Spindle Motor (Sensorless)**]

Configuration:

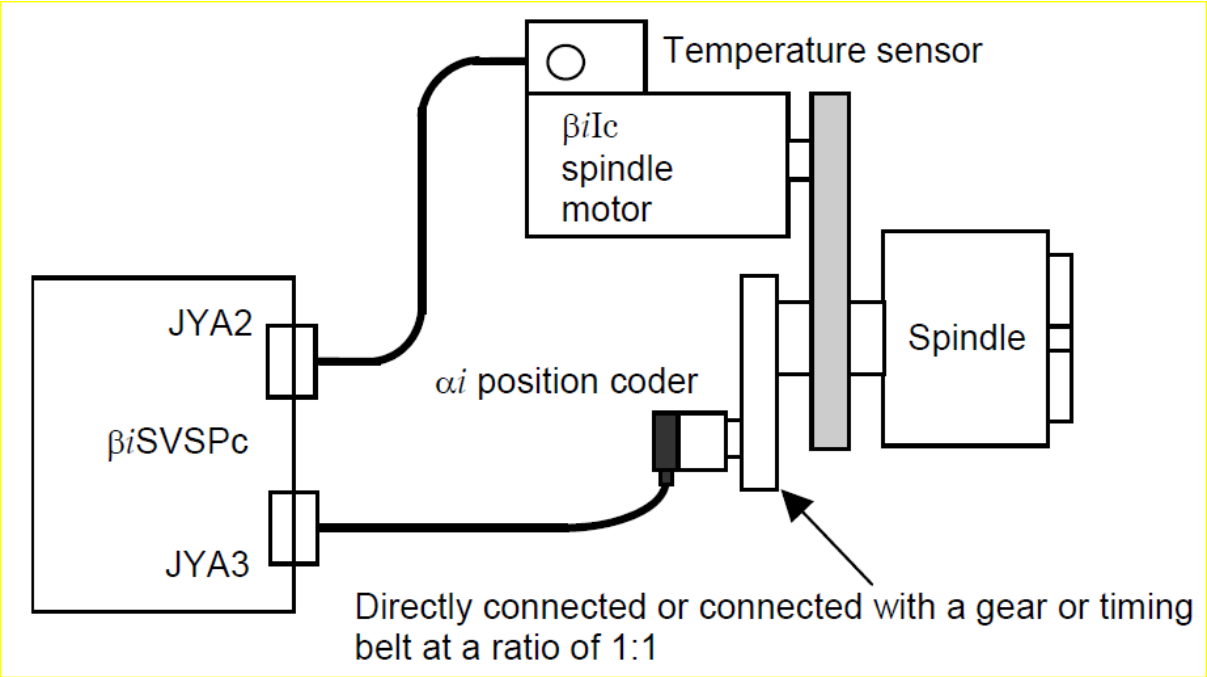

Parameters to be consider for external position coder interface:

Parameter No.	Settings	Description
4000 #0	Depends on the configuration.	Rotation directions of the spindle and motor
4001 #4	Depends on the configuration.	Spindle sensor mounting direction
4002 #3,2,1,0	0,0,1,0	Uses the αi position coder as the spindle sensor.
4003 #7,6,5,4	0,0,0,0	Sets the number of spindle sensor gear teeth.
4056 to 4059	Depends on the configuration.	Gear ratio between the spindle and motor

Parameter to be handled for bypassing external position coder in FS-0iF controller:

Please ensure to note the below parameter values before modifying
PRM 4002#1
PRM 4005#0
PRM 4136 ~ 4141 = 0

If above NC parameters is not set correctly during bypassing external position coder, you may expereance some spindle related alarm

Indication	Description of error state	Action
51	The position coder parameters for the βiIc spindle motor are not set correctly.	Check bit 1 of parameter No. 4002 and parameters Nos. 4136, 4137, 4138 and 4139.

0i-D	30i	#7	#6	#5	#4	#3	#2	#1	#0
4002	4002					SSTYP3	SSTYP2	SSTYP1	SSTYP0

SSTYP3 to SSTYP0 Spindle sensor type

This parameter sets the type of a separate detector to be attached to the spindle (detector to be connected to connector JYA3 or JYA4).

SSTYP3	SSTYP2	SSTYP1	SSTYP0	Spindle sensor type
0	0	0	0	None (No position control function is used.)
0	0	0	1	Uses the motor sensor for position feedback
0	0	1	0	αi position coder
0	0	1	1	Separate αiBZ sensor, αiCZ sensor (analog)
0	1	0	0	α position coder S
0	1	1	0	Separate αiCZ sensor (serial)
1	1	1	0	Separate αiBZ sensor, αiCZ sensor (analog) [Setting for detecting the one-rotation signal at less than 10 min^{-1} (*3)] Sinusoidal wave A/B phase sensor from another company

NOTE

*1 When using a rectangular wave phase A/B, 1024-p/rev position coder, set the same settings as for the αi position coder (0,0,1,0).

*2 It is not possible to use the αiCZ sensor (serial) as both motor sensor and spindle sensor.

*3 When this setting is made in combination with the setting for detecting the one-rotation signal regardless of the spindle speed (bit 2 of parameter No. 4394 =1), the one-rotation signal can be detected at less than 10 min^{-1}.
However, the position at which to detect the one-rotation signal varies with a change in the temperature of the sensor. Usually, set 0,0,1,1. Refer to "FANUC SERVO AMPLIFIER αi series Descriptions" (B-65282EN) for information about the extent to which the position at which to detect the one-rotation signal varies.

0i-D	30i	#7	#6	#5	#4	#3	#2	#1	#0
4002	4002			SVMDRT					

SVMDRT Whether to enable the rotation direction signal (SFR/SRV) function on servo mode (rigid tapping/spindle positioning)

0 : Enables the rotation direction function.
If a move command from the CNC is positive (+),
(a) The spindle rotates in the CCW direction when the input signal SFR (bit 5 of G70) = 1.
(b) The spindle rotates in the CW direction when the input signal SRV (bit 4 of G70) = 1.

1 : Disables the rotation direction function.
If a move command from the CNC is positive (+), the spindle rotates in the CCW direction when the input signal SFR = 1 or SRV = 1.

	#7	#6	#5	#4	#3	#2	#1	#0
4002				SMORLM				

SMORLM SM pin output data selection

0 : Speedometer data

1 : Load meter data

0i-D	30i	#7	#6	#5	#4	#3	#2	#1	#0
4002	4002				CSDRCT				

CSDRCT Whether to use the rotation direction signal (SFR/SRV) on Cs contouring control

0 : Rotation direction function enabled

(1) When bit 1 (ROTA2) of No. 4000 = 0, and the value of a move command from the CNC is positive (+)

(a) The spindle rotates counterclockwise when input signal SFR(G70#5) is set to 1.

(b) The spindle rotates clockwise when input signal SRV(G70#4) is set to 1.

(2) When bit 1 (ROTA2) of No. 4000 = 1, and the value of a move command from the CNC is positive (+)

(a) The spindle rotates clockwise when input signal SFR(G70#5) is set to 1.

(b) The spindle rotates counterclockwise when input signal SRV(G70#4) is set to 1.

1 : Rotation direction function disabled

The rotation direction function of the SFR/SRV signal is disabled. Only the function for enabling spindle motor excitation is available.

(1) When bit 1 (ROTA2) of parameter No. 4000 is set to 0

When the value of a move command from the CNC is positive (+), and SFR/SRV = 1, the spindle rotates in the CCW direction.

(2) When bit 1 (ROTA2) of parameter No. 4000 is set to 1

When the value of a move command from the CNC is positive (+), and SFR/SRV = 1, the spindle rotates in the CW direction.

0i-D	30i	#7	#6	#5	#4	#3	#2	#1	#0
4002	4002		SYCDRT						

SYCDRT Whether to enable the rotation direction signal (SFR/SRV) function on spindle synchronous control

0 : Enables the rotation direction function.

If a move command from the CNC is positive (+),

(a) The spindle rotates in the CCW (counterclockwise) direction when the input signal SFR (bit 5 of G70) = 1.

(b) The spindle rotates in the CW (clockwise) direction when the input signal SRV (bit 4 of G70) = 1.

1 : Disables the rotation direction function.

If a move command from the CNC is positive (+), the spindle rotates in the CCW (counterclockwise) direction when the input signal SFR = 1 or SRV = 1.

0i-D	30i	#7	#6	#5	#4	#3	#2	#1	#0
4005	4005								CS360M

CS360M Sets the detection unit for Cs contouring control.

0 : 0.001°

1 : 0.0001°

Set 0 usually. When a αiCZ sensor (analog, serial) is used as the position detector and the setting unit IS-C is used, set 1.

	#7	#6	#5	#4	#3	#2	#1	#0
4005								VCTLPC

VCTLPC Sets the velocity feedback method.

0 : Exercises velocity control with an estimated velocity only.

1 : Uses a velocity calculated from the position coder signal to exercise velocity control.

Set to 1.

0*i*-D	30*i*	#7	#6	#5	#4	#3	#2	#1	#0
4005	4005			GRUNT1					
4006	4006							GRUNIT	

GRUNIT: Setting 1 for resolution of gear ratio
GRUNT1: Setting 2 for resolution of gear ratio
Standard setting: 0

Set resolution of gear ratio. Unit of gear ratio parameter (No.4056~4059) is changed by these settings. The combination of parameter settings and the resolution is as follows.

(GRUNIT,GRUNT1)=(0,0):(1/100)
(GRUNIT,GRUNT1)=(1,0):(1/1000)
(GRUNIT,GRUNT1)=(0,1):(1/10)
(GRUNIT,GRUNT1)=(1,1):There is no setting resolution

0*i*-D	30*i*		
4056	4056	**Gear ratio (HIGH)**	**CTH1A=0,CTH2A=0**
4057	4057	**Gear ratio (MEDIUM HIGH)**	**CTH1A=0,CTH2A=1**
4058	4058	**Gear ratio (MEDIUM LOW)**	**CTH1A=1,CTH2A=0**
4059	4059	**Gear ratio (LOW)**	**CYH1A=1,CTH2A=1**

Unit of data: (Number of motor revolution per spindle one revolution) / (setting resolution for gear ratio)
Valid data range: 0 to 32767
Standard setting value: 100

These data are used to set the gear ratio between a spindle and a spindle motor.
Example: Assume that the motor rotates 2.5 revolution per the spindle one revolution and the setting resolution for gear ration is 1/100, please set "2.5/(1/100)=250" as the data.

0*i*-D	30*i*	bit	Standard initial setting data	Contents
4136	4136		Depends on the model	Motor voltage on velocity control mode
4137	4137		Depends on the model	Motor voltage on servo mode/spindle synchronous control mode
4138	4138		Depends on the model	Base speed of motor output specifications
4139	4139		Depends on the model	Output limit for motor output specifications
4140	4140		Depends on the model	Excitation voltage saturation speed at no-load
4141	4141		Depends on the model	Base speed limit ratio

0*i*-D	30*i*	
4083	4083	Motor voltage setting on velocity control mode
4136	4136	Motor voltage setting on velocity control mode (for low-speed characteristics)

Unit of data : 1%
Valid data range : 0 to 100
Initial setting value : Depends on the motor model.

This parameter sets the motor voltage under the no-load condition in velocity control mode.
The motor voltage to be set depends the motor model, the most usual setting is 30.
If an abrupt application of a heavy load in the no-load condition lowers the motor speed, adjust this parameter to around 50 to 70 to improve the torque response characteristic.
Note that, however, setting a large value causes heating and large activation sound during no-load motor operation.

The following problems may be removed by increasing the setting value.

(a) In low-speed and heavy-load cutting, the motor stops immediately after the start of cutting.
(b) At the start of hobbing or threading, the motor speed fluctuates, causing the thread precision to be degraded.

0*i*-D	30*i*	
4085	4085	Motor voltage (for high-speed characteristics) on servo mode/ spindle synchronous control
4137	4137	Motor voltage (for low-speed characteristics) on servo mode/ spindle synchronous control

Unit of data : 1%
Valid data range : 0 to 100
Initial setting value : Depends on the motor model.

These parameters set a motor voltage on servo mode (rigid tapping, spindle positioning, and so forth) and spindle synchronous control.
When performing rigid tapping, set "100" usually.
When the maximum speed for rigid tapping (in terms of motor axis) is higher than the base speed of the spindle motor (No. 4100 for high-speed characteristics and No. 4138 for low-speed characteristics), set a value less than "100" as the motor voltage for rigid tapping (No. 4085 for high-speed characteristics and No. 4137 for low-speed characteristics), according to the following expression:

$$\text{Motor voltage (\%)} = 100 \times \frac{\text{Spindle motor base speed}}{\text{Maximum speed for rigid tapping (in terms of motor axis)}}$$

In this case, set "1" for the setting related to the motor voltage control characteristics (bit 4 of parameter No. 4016) or the setting related to the motor voltage control characteristics on servo mode (bit 1 of parameter No. 4540).

Parameter No.				Description
0*i*-D		30*i*		
MAIN	SUB	MAIN	SUB	
4138	4286	4138	4286	Base speed of motor output specifications [for low-speed characteristics of speed range switching]
4139	4287	4139	4287	Output limit for motor output specifications [for low-speed characteristics of speed range switching]
4140	4288	4140	4288	Excitation voltage saturation speed at no-load [for low-speed characteristics of speed range switching]
4141	4289	4141	4289	Base speed limit ratio [for low-speed characteristics of speed range switching]

END OF ACTIVITY